HTGR Technology Course for the Nuclear Regulatory Commission

May 24 – 27, 2010

Module 6a

Pebble Bed HTGR Core Design Description

Pieter Venter

Pebble Bed Modular Reactor (Pty) Ltd.

Outline

- Reactor functions
- Reactor design description
- Reactor operating modes

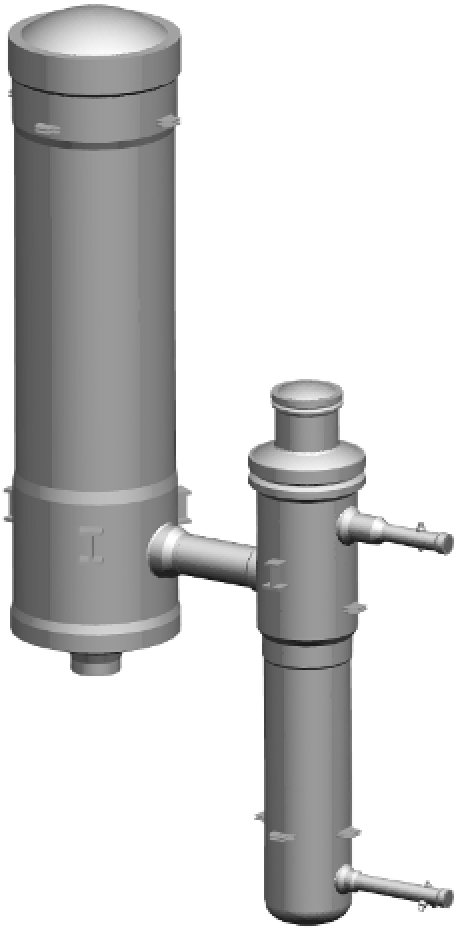

Typical Pebble Bed Reactor and Features

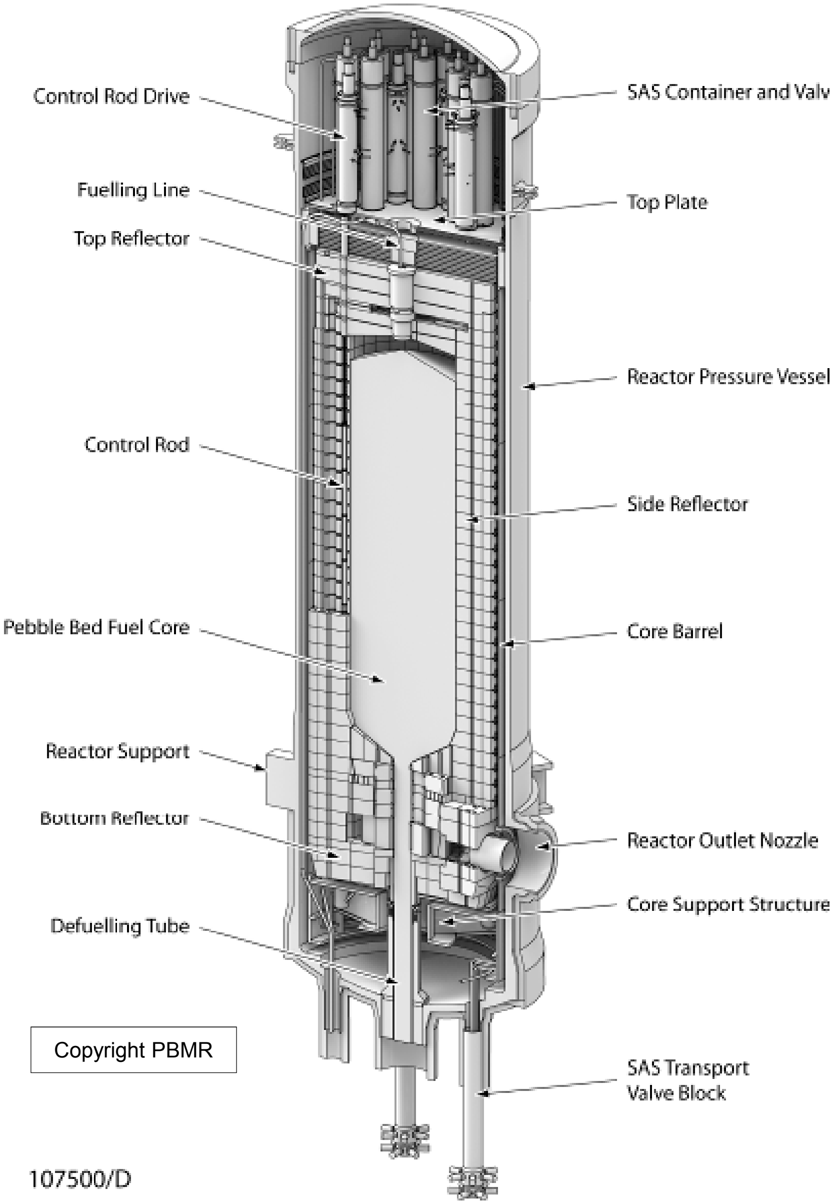

Copyright PBMR

- **Passive Safety Features**
  - Ceramic coated-particle fuel
    - Maintains integrity during loss-of-coolant accident
  - Ceramic core with high heat capacity
    - High temperature structural integrity
    - Long thermal response times
  - Passive heat transfer path
    - Limits fuel temperature during loss-of-coolant accident
  - Low power density
  - Inert Helium Coolant
  - Negative Temperature Coefficient
  - Two diverse shutdown systems
    - Inserts under gravity when power is cut
- **Operating Features**
  - On-line refueling
    - No refueling outages
  - High gas temperature
    - Efficient power conversion cycles
    - Process Heat Applications

Prismatic and Pebble Terminology

Prismatic Term	Pebble Bed Term
Shutdown Cooling System	Core Conditioning System
Fuel Elements Fuel Compacts	Fuel Spheres
Reserve Shutdown Pellets	Small Absorber Spheres
Active Core	Fuel Core
Operating Control Rods Start-up Control Rods	Control Rods

Outline

- Reactor functions
- Reactor design description
- Reactor operating modes

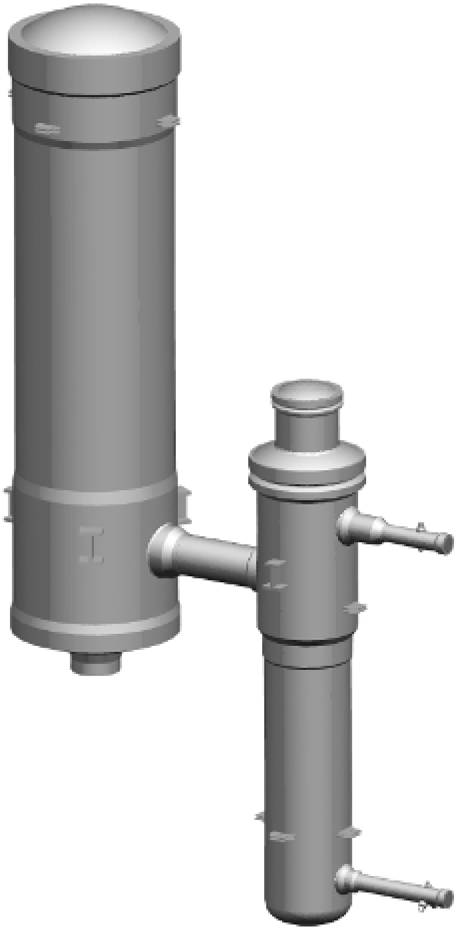

Pebble Bed Description

- A pebble bed core is a loosely packed bed of spherical fuel elements
- Fuel spheres are added from the top and extracted at the bottom
- Fuel can be recycled a number of times to flatten the power profile
- Core volume is large to limit the power density to 4-6 MWt/m^3

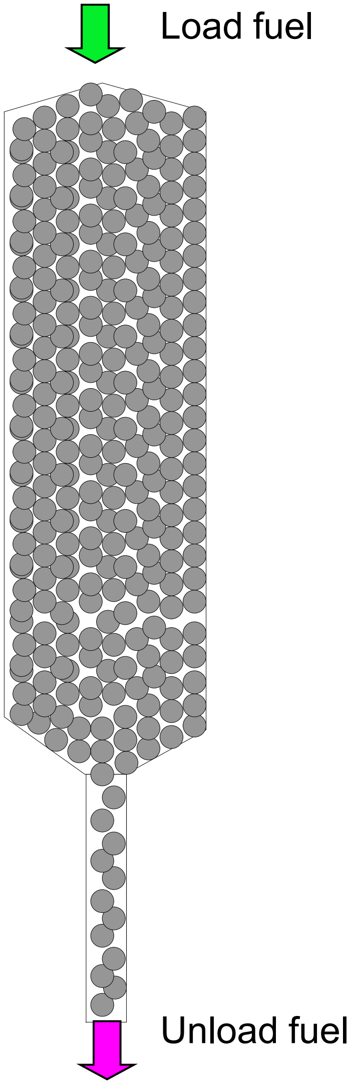

Pebble Fuel Requirements

- **The core design specifies the following on the fuel:**
  - Heavy metal loading
  - Enrichment
  - Operating and accident temperatures
  - Burnup and neutron fluence
- **Various spheres can be introduced in to the core (e.g different enrichments, graphit only spheres, UO_2, UCO)**
- **Detail description of the fuel can be found in Module 7**

Note: graphite only spheres are used in the loading or unloading of the core and initial approach to criticality

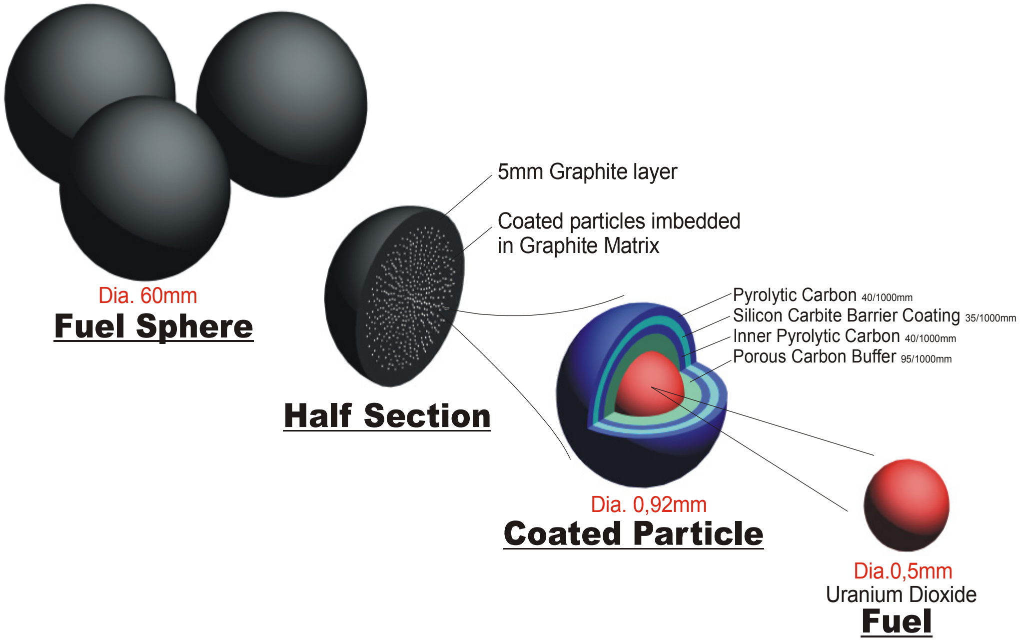

Effect of Power Density on Accident Fuel Temperature

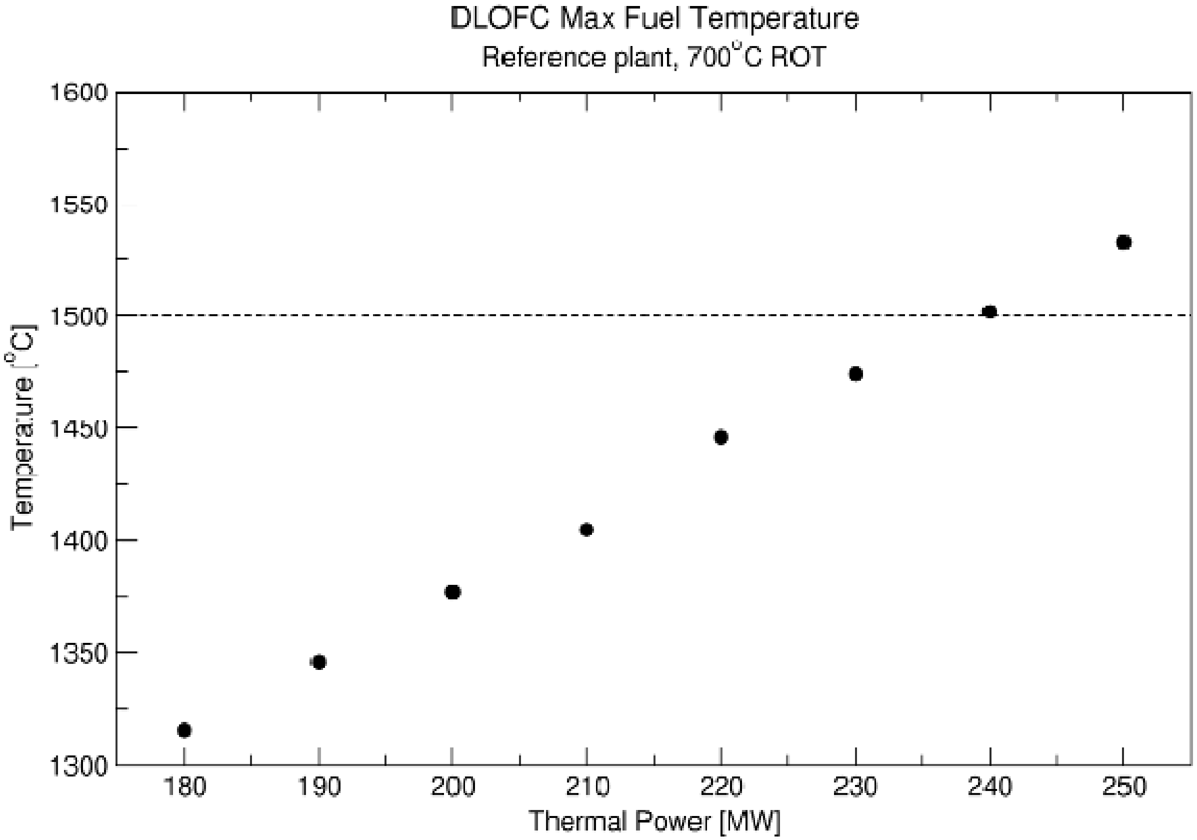

- **Given a fixed core volume, increasing the power in that volume leads to an increase in maximum accident fuel temperature**

Core Shape

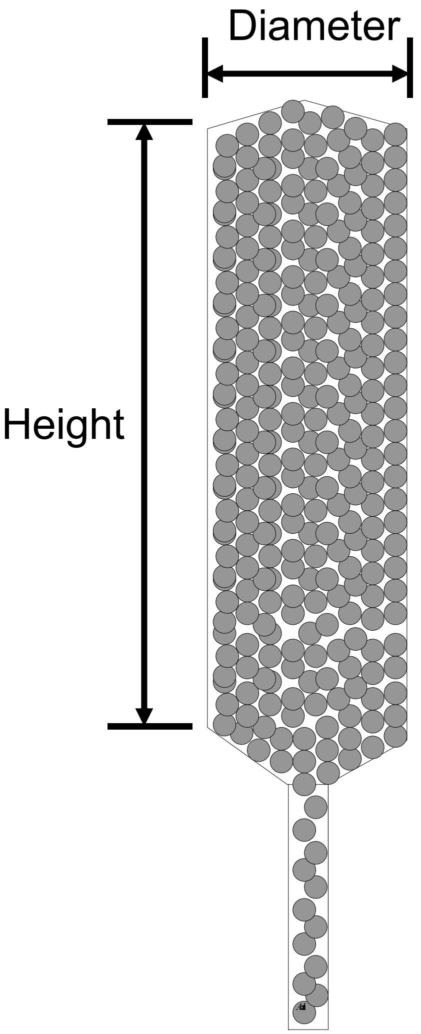

- **Core shape is tall and slender to allow for increased heat transfer area from the fuel to the environment**
- **This results in increased neutron leakage**
- **Core diameter is constrained by the heat transfer path for removal of decay heat (i.e. accident fuel temperatures)**

Effect of Core Shape on Maximum Accident Fuel Temperature

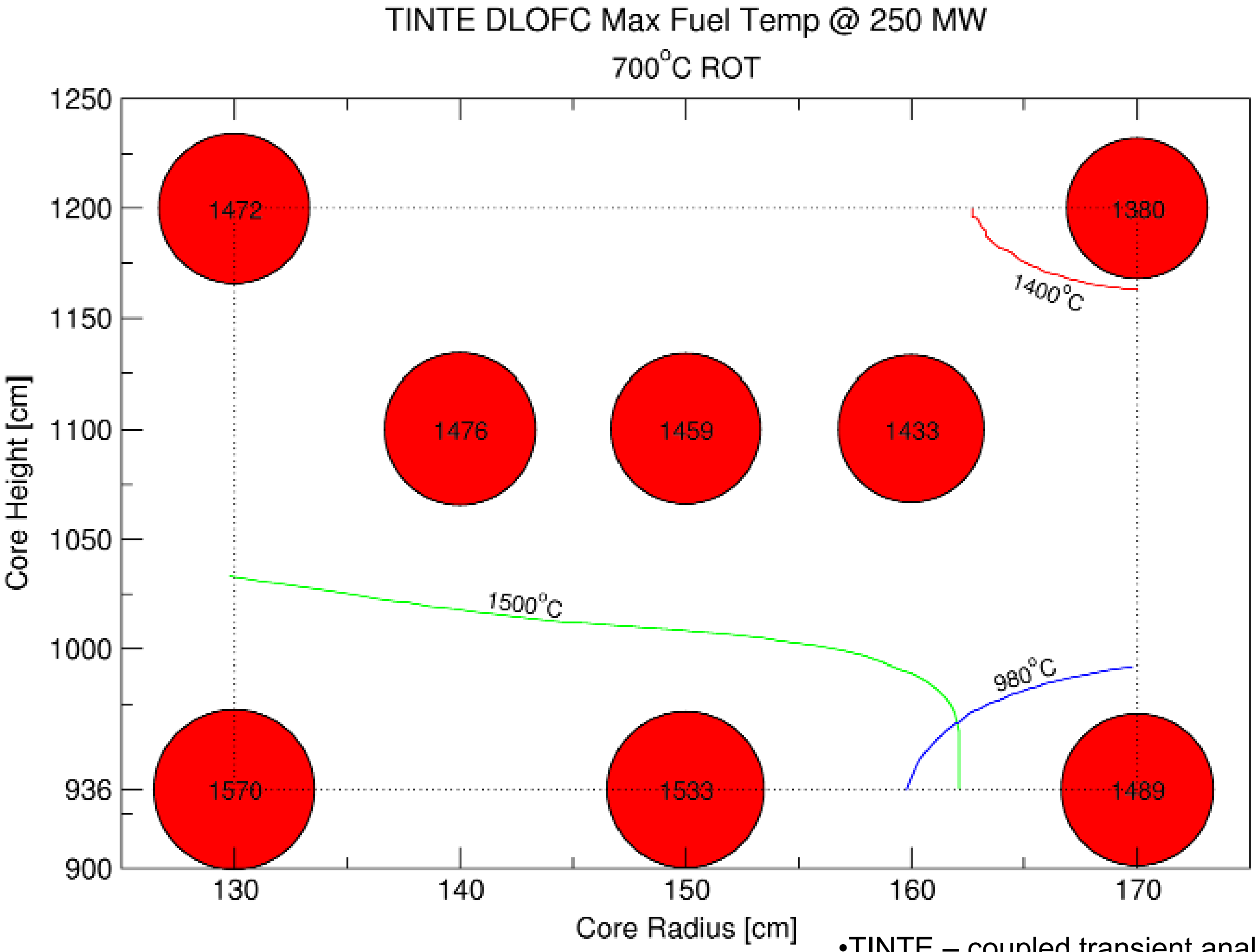

- Blue - 980°C normal operating maximum fuel temperature isotherm
- Red - 1400°C maximum accident fuel temperature isotherm
- Green - 1500°C maximum accident fuel temperature isotherm
- Red dots represent the calculated maximum fuel temperature for a core geometry

- TINTE – coupled transient analysis code
- DLOFC – depressurized conduction cooldown event

Idaho National Laboratory

P B M R

Core Power

- **Increasing the core diameter does not proportionally increase the power**
- **This limits the reactor power from a cylindrical core to ~250 MWth without core rods**
- **This can be increased by using an annular or two-zone core**

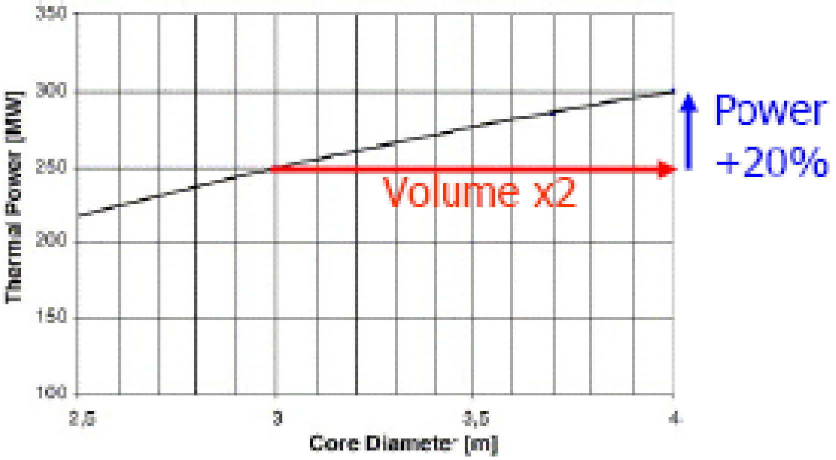

Ben Said etal, Nucl Eng Des, 236(2006) 648

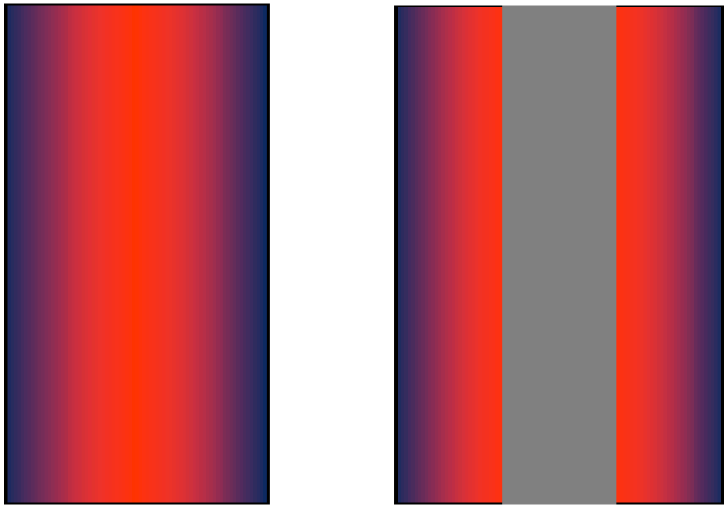

Annular Pebble Bed Cores

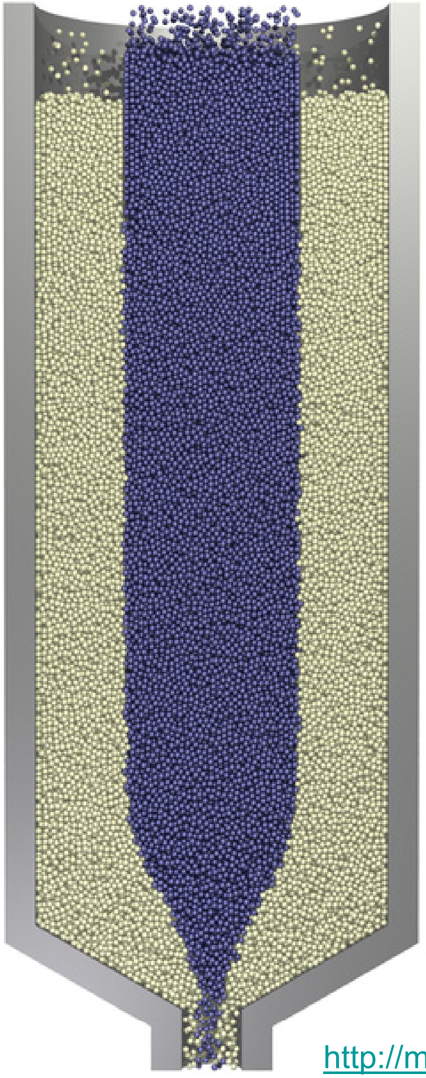

- Annular cores can be formed by using graphite spheres in the centre (dynamic centre column) or by stacking graphite blocks in the centre (solid centre column)
- Dynamic centre column leads to increased bypass flows and loosely defined interface with fuel

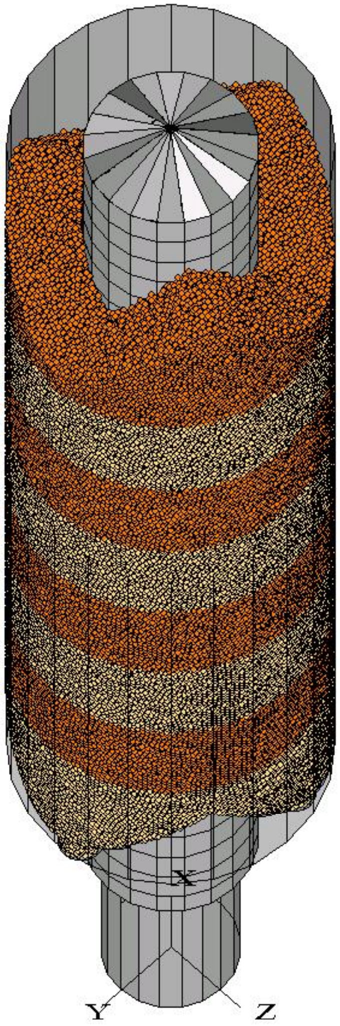

http://math.berkeley.edu/~chr/research/pebble-bed/

Reflectors Description

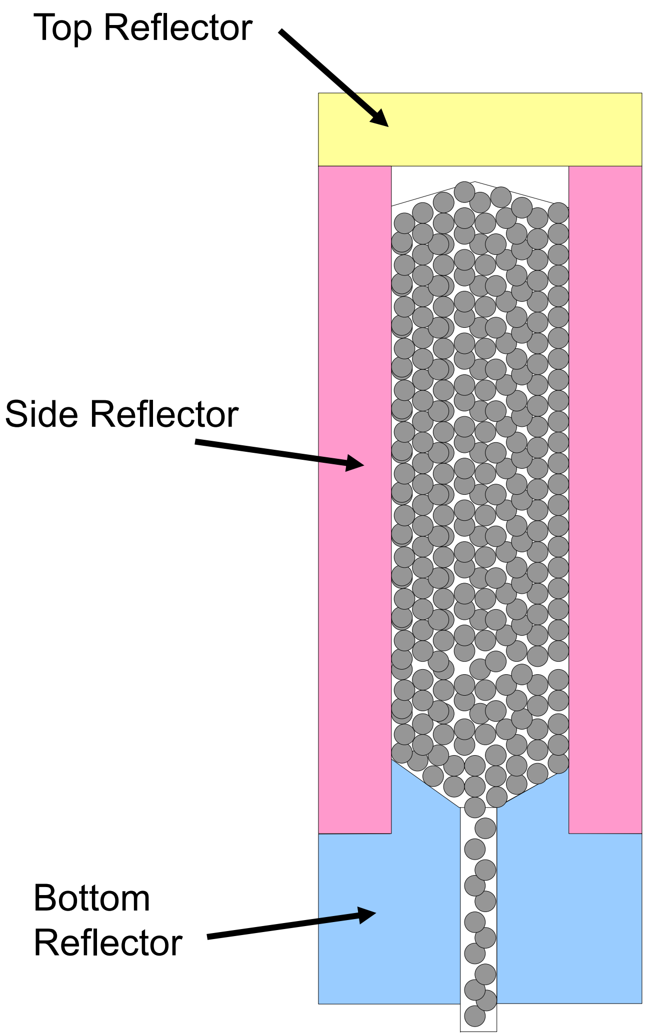

- Reflectors are added around the core to reduce the neutron loss
- Reflectors are made of high purity graphite
- The reflectors also form the core cavity and provide structural support to the fuel elements
- Typical reflector width is 1 meter
- Graphite experiences damage in neutron environment and needs to be replaced (every 20 or 30 years)
- Replacement is designed for the reflectors in contact with the fuel spheres (inner side reflector, first layer of the bottom reflector) that experience significant damage due to neutron fluence

Neutron Control

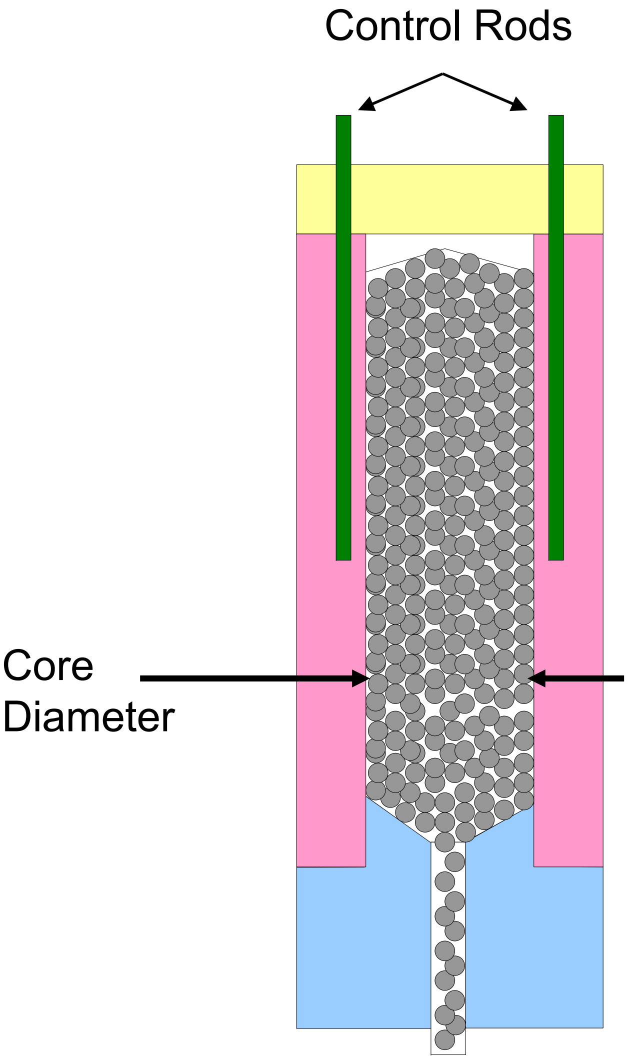

- **Control rods are added to control the reactivity of the core by absorbing neutrons**
- **Control rods are located in channels in the side reflector**
- **Previous in-core rods resulted in increased fuel damage**
- **The effectiveness of the control rod limits the maximum core radius (~1.5 meter)**
- **Core diameter may also be constrained by RPV diameter manufacturing constraints**

Flow Path

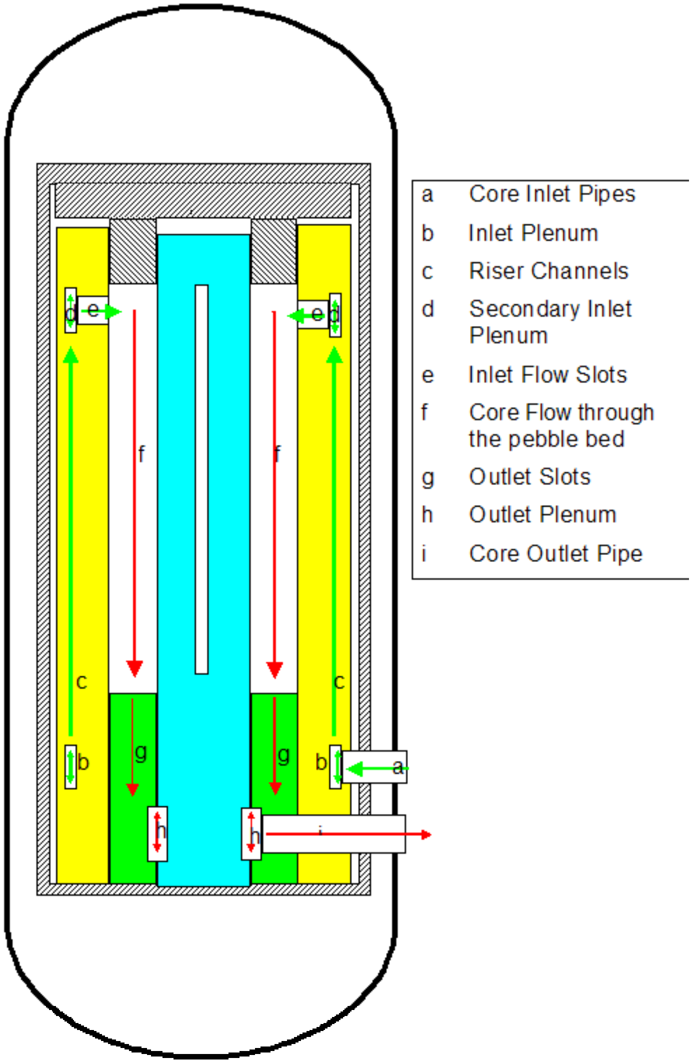

a	Core Inlet Pipes
b	Inlet Plenum
c	Riser Channels
d	Secondary Inlet Plenum
e	Inlet Flow Slots
f	Core Flow through the pebble bed
g	Outlet Slots
h	Outlet Plenum
i	Core Outlet Pipe

- **Flow path is designed to guide coolant through the core**
- **Flow direction can be up (AVR) or down (THTR)**
- **Some of the flow may be used to cool metallic components**
- **Flow path design has effect on the temperatures of the components, specifically the inlet flow defines the metallic component temperatures**
  - Separate hot gas ducts in designs with high reactor inlet temperatures (e.g. direct Brayton cycles)
  - Annulus around outlet duct in designs with lower reactor inlet temperatures (e.g. indirect Rankine cycles)

Key Operating Parameters

	Indirect Steam Cycle	Direct Gas Cycle
Reactor Inlet Temperature	250 °C	500 °C
Reactor Outlet Temperature	700-750 °C	850-900 °C
Pressure	6-7 MPa	8-9 MPa
Typical Core Geometry	Cylindrical	Annular

Typical Cylindrical Core Layout

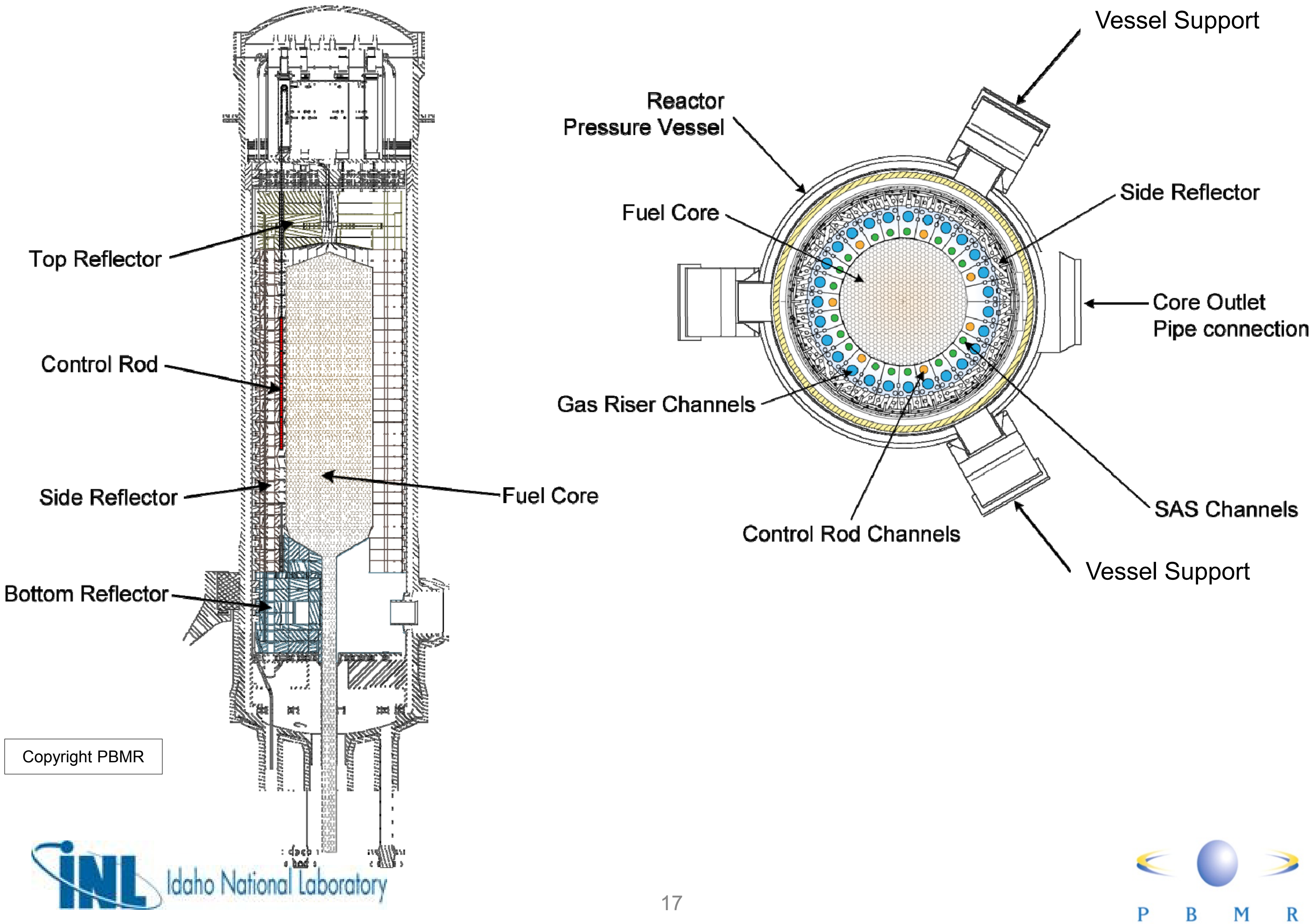

Typical Annular Core Layout

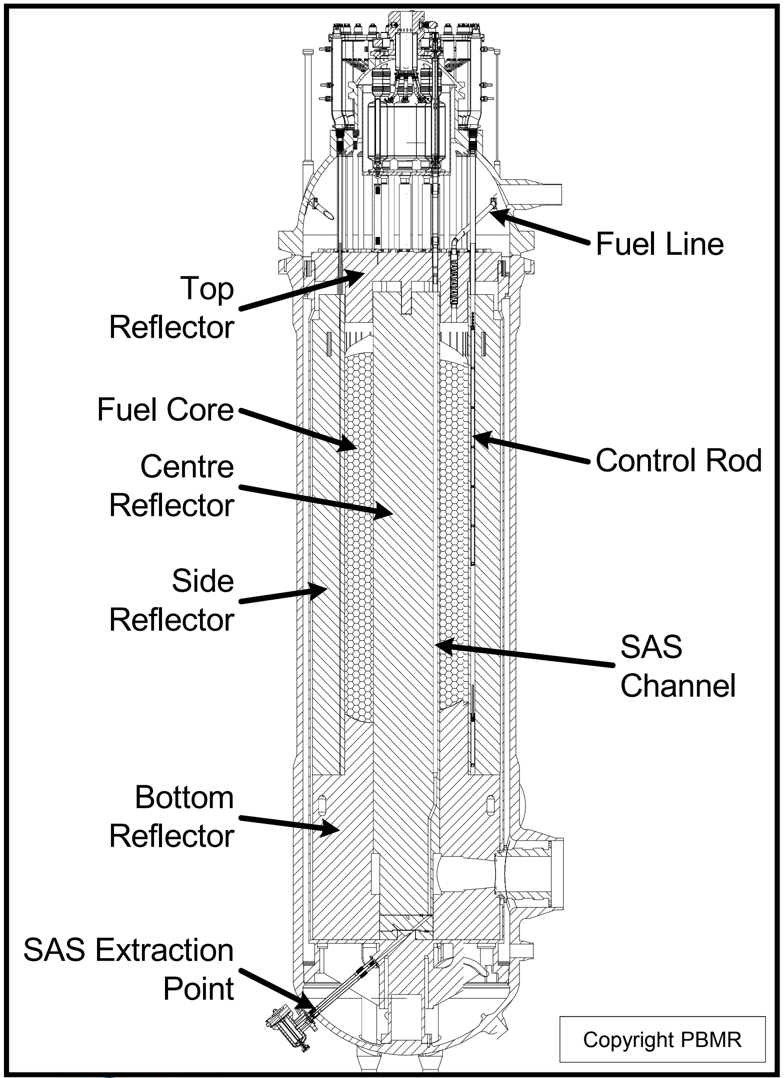

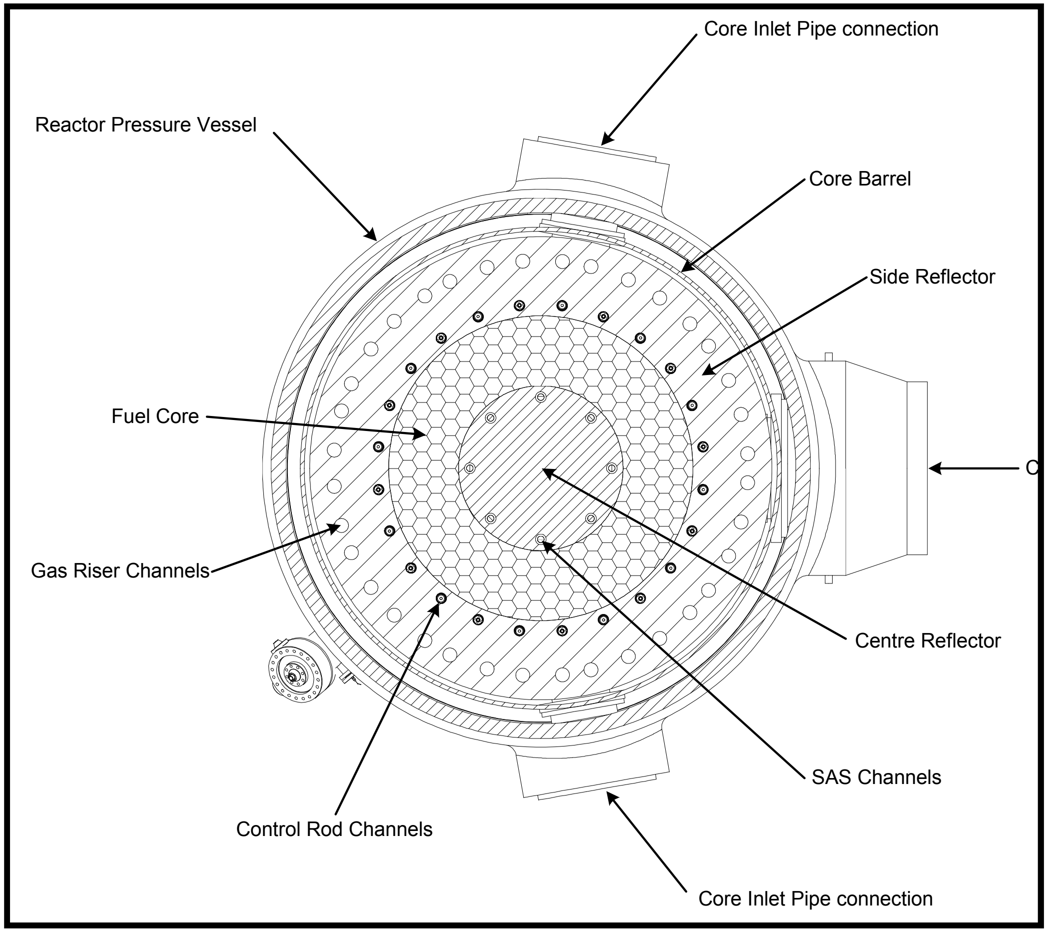

Graphite Reflectors

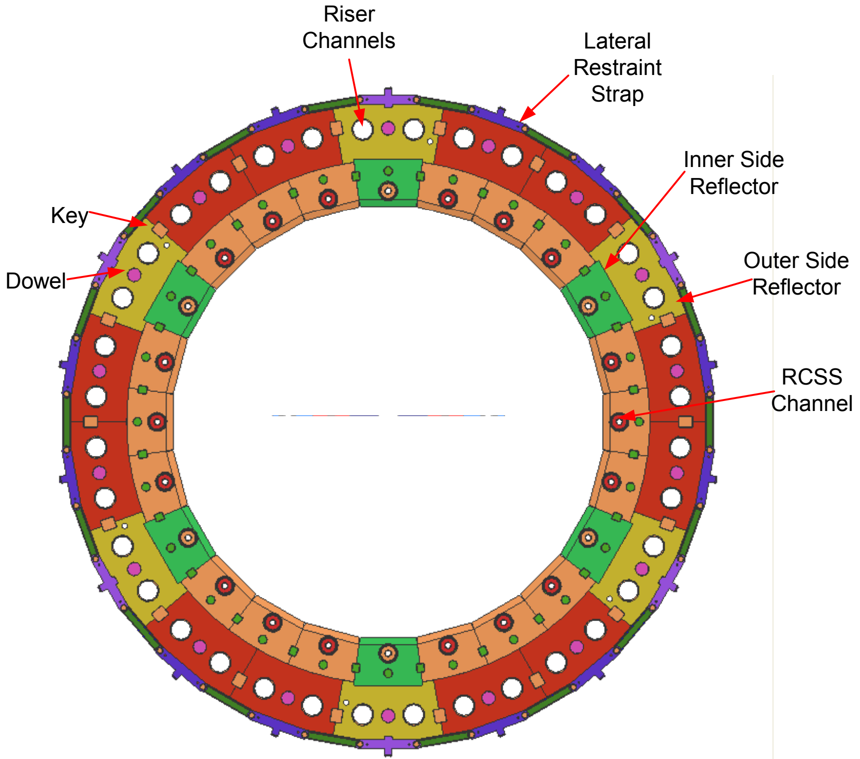

- **Side reflector is constructed from separate graphite blocks to form a ring**
- **Graphite sleeves and keys are used to reduce gas leakage between the blocks**
- **Graphite dowels are used to position the blocks in free moving columns**
- **Construction is based on THTR and design guidelines developed for German HTR programme**
- **The same design approach is used for the other reflectors as well**

Core Barrel Description

- Provide support to the graphite core structures
- Act as thermal shield to the reactor vessel
- Can be constructed from ferritic (2¼ CrMo) or austenitic (SS316) steel using ASME III NG and high temperature code case N-201

Reactor Vessel Description

- Contain the coolant
- Provide support to the core barrel
- Can be constructed from typical LWR material (SA508 / SA533) if the flow path is designed accordingly, otherwise high temperature materials such as 9Cr1Mo can be used
- ASME III NB or NH is usually used
- Module 10a will address vessels in more detail
- Module 11 will address high temperature materials in more detail

	SA508/533	9Cr1Mo
ASME III Section	NB	NH
Temperature limit	371 °C	650 °C

Control Rod Description

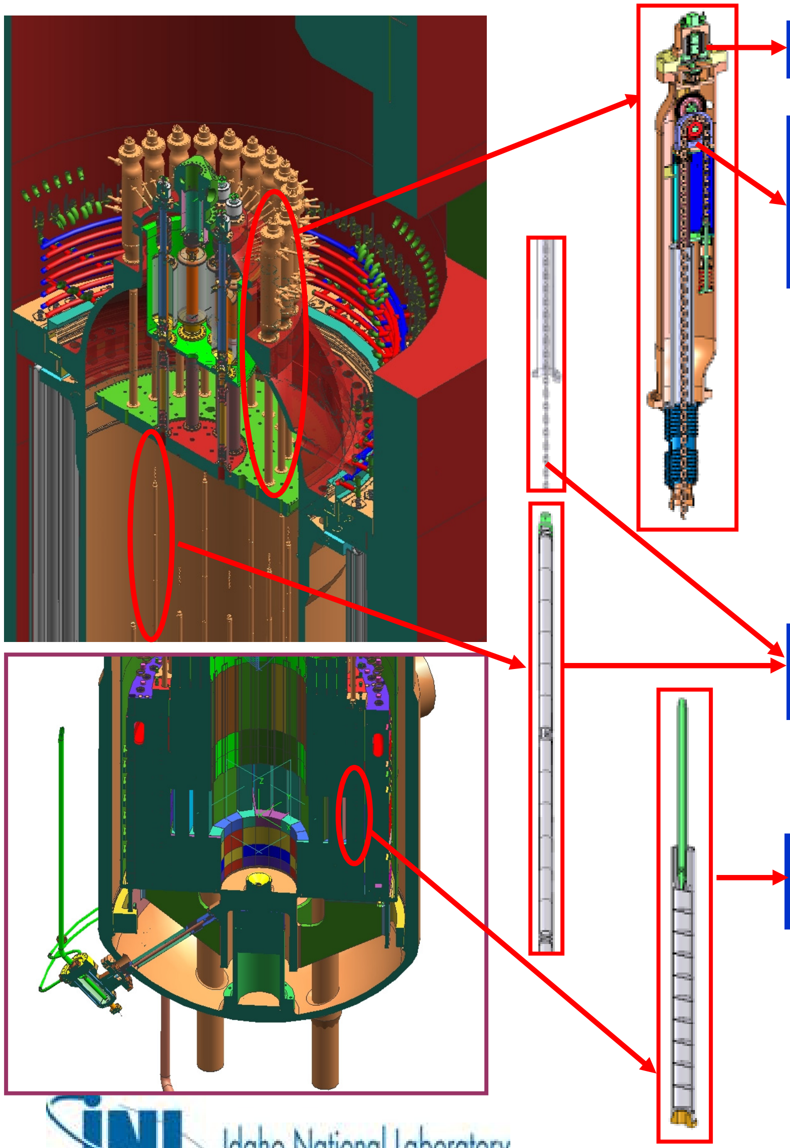

RCS Drive Motor

Keep the control rods in position, move the rods up and down and allow insertion during power failure

Control Rod Drive Mechanism (CRDM)

Transfer rotational movement of the motor into linear movement of the control rods

Control Rod & Chain

Use B4C rings to absorb neutrons

Chain suspends the control rod

Secondary Shock Absorber

The function of the Secondary Shock Absorber is to prevent damage to the rod and the graphite structures in the inadvertent event of a rod drop

Small Absorber Spheres Description

- Small graphite balls containing boron carbide
- Stored in canisters above the core
- Electromagnetic valve keeps the balls from inserting
- The power to the electromagnet is interrupted to insert the SAS, which falls under gravity into channels in the reflectors
- The SAS can be extracted from the core at the bottom by pneumatic conveying back to the canisters

Passive Heat Transfer Path Description

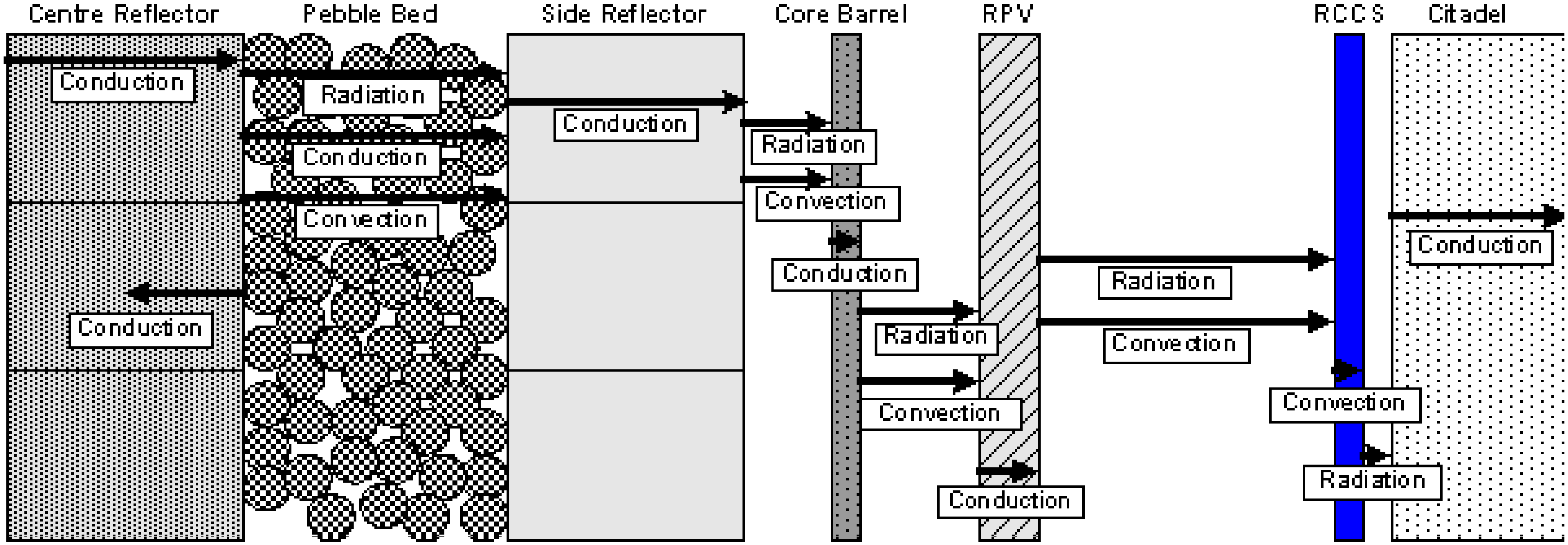

- **Typical results for pressurized and depressurized conduction cooldown events are shown in Thermo Fluid Module**

Component Temperature Limits

Component	Normal Operation Temperature Limit	Accident Temperature Limit	Basis
Reactor Vessel **-SA508/533** **-9Cr1Mo**	371 °C 650 °C	538 °C 650 °C	ASME Code Material Limits
Core Barrel -**2 1/4 CrMo** -**Type 316H**	371 °C 427 °C	760 °C 816 °C	ASME Code Material Limits
Control Rods **- Alloy 800H**	427 °C	760 °C	ASME Code Material Limits

These material limits are explained in Module 11 on High Temperature Materials

Outline

- Reactor functions
- Reactor design description
- Reactor operating modes

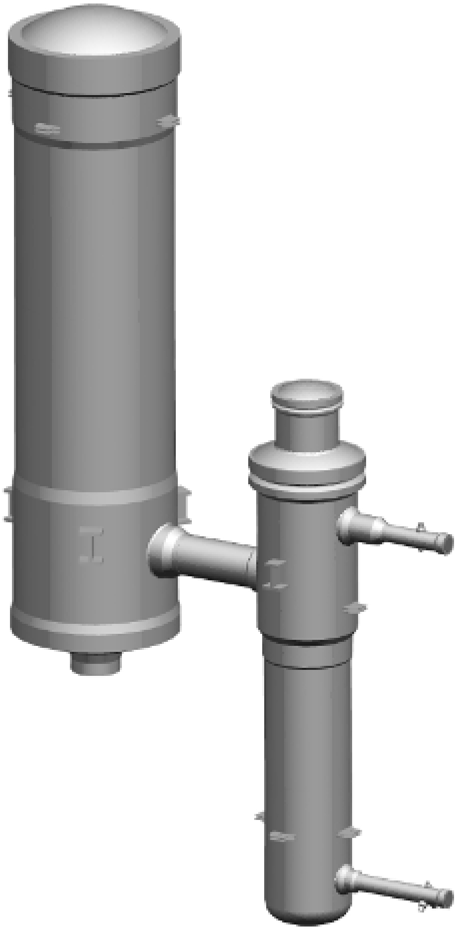

Typical Reactor Operating Modes

- **Start-up**
  - Heat up the core using heat from the circulator
  - Establish coolant flow through the core
  - Extract the SAS (if inserted)
  - Extract the control rods and make the core critical

- **Energy production**
  - Power can be adjusted by changing the mass flow rate of the coolant through the core. This can be effected by adjusting the coolant pressure (Inventory Control) or the flow rate (Circulator Speed Control)
  - Control rods are used to adjust the reactor outlet temperature
  - On-line refueling to maintain criticality

- **Shutdown**
  - Insert control rods to shutdown the reactor
  - Insert secondary shutdown system to shutdown the reactor to cold temperatures
  - Remove decay heat with either main circuit, or with residual heat removal system

Summary

- Layout of reactor components and selection of materials allows operation with very high coolant temperatures
- Reactor design is driven by passive safety features
- On-line refueling allows extended reactor operation without requiring refueling outages

Suggested Reading

- The Impact of Design on the Decay Heat Removal Capabilities of a Modular Pebble Bed HTR, N. Ben Said et al, Nuclear Engineering and Design, Volume 236, Issues 5-6, March 2006, Pages 648-656
- AVR-Experimental High Temperature Reactor, 21 Years of Successful Operation for a Future Energy Technology, VDI Verlag, ISBN 3-18-401015-5
- Hochtemperaturreaktortechnik, Kugeler and Shulten, Springer-Verlag, 1989, ISBN 3-540-51535-6
- Topical Issue on the HTR-10, Nuclear Engineering and Design, Volume 218, Issues 1-3, Pages 1-267, October 2002